Materials

Part	Material	Standard
Steel plates	Grade 50 S355J2+N Q345	ASTM A572M EN 10025-2 GB-2008
Ribbed bars	Grade 75 B500B HRB 500	ASTM A615M EN 10080 GB 1499

Dimensions

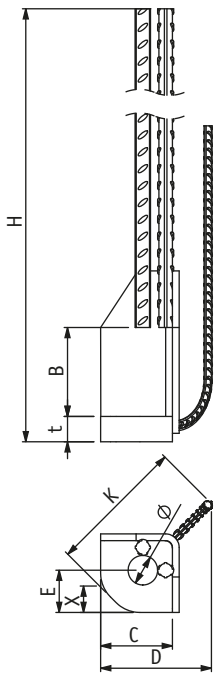

	HPKM 16 ACI	HPKM 20 ACI	HPKM 24 ACI	HPKM 30 ACI	HPKM 39 ACI	manuf. tolerances
B	85	95	105	120	150	+3, -0
C	75	80	85	90	110	+2, -0
D	115	120	125	140	180	
E	50	50	50	50	60	± 1
H	725	875	1105	1430	1885	± 10
K	135	145	150	175	225	
t	15	20	30	45	50	
X	30	30	30	30	37	
Ø	28	31	35	40	55	+2, -0
Weight	2.2	3.9	6.5	13.4	26.4	
Color code	Yellow	Blue	Gray	Green	Orange	

Lap lengths of anchor bars are defined according to concrete grade 30 MPa cylinder strength.

Resistances

Design values of tensile or compressive resistances ϕP_n of individual HPKM® Column Shoes for concrete grade 30 MPa cylinder strength. Anchor bolt material grade 60 according to standard ASTM A615M.

Column Shoe	Rebar Anchor Bolt	ϕP_n [kN]
HPKM 16 ACI	HPM 16 ACI ASTM	63
HPKM 20 ACI	HPM 20 ACI ASTM	97
HPKM 24 ACI	HPM 24 ACI ASTM	141
HPKM 30 ACI	HPM 30 ACI ASTM	224
HPKM 39 ACI	HPM 39 ACI ASTM	390

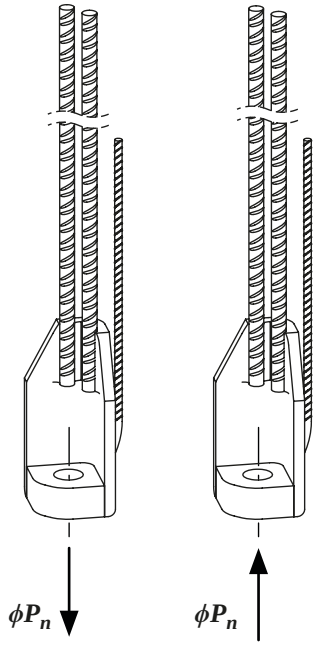

Design values of tensile or compressive resistances ϕP_n of individual HPKM® Column Shoes for concrete grade 30 MPa cylinder strength. Anchor bolt material B500B according to standard EN 10080.

Column Shoe	Rebar Anchor Bolt	ϕP_n [kN]
HPKM 16 ACI	HPM 16 ACI EN	55
HPKM 20 ACI	HPM 20 ACI EN	86
HPKM 24 ACI	HPM 24 ACI EN	125
HPKM 30 ACI	HPM 30 ACI EN	199
HPKM 39 ACI	HPM 39 ACI EN	346

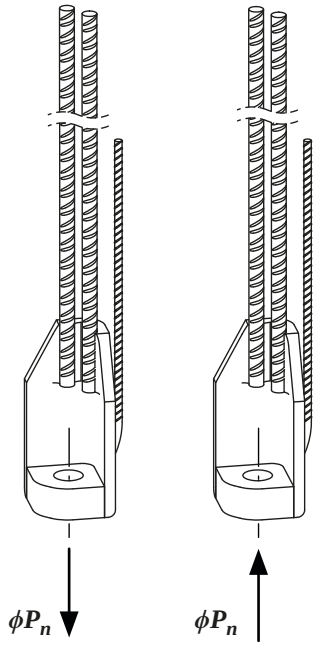

Design values of tensile or compressive resistances ϕP_n of individual HPKM® Column Shoes for concrete grade 30 MPa cylinder strength. Anchor bolt material HRB500 according to standard GB 1499.

Column Shoe	Rebar Anchor Bolt	ϕP_n [kN]
HPKM 16 ACI	HPM 16 ACI GB	63
HPKM 20 ACI	HPM 20 ACI GB	97
HPKM 24 ACI	HPM 24 ACI GB	141
HPKM 30 ACI	HPM 30 ACI GB	224
HPKM 39 ACI	HPM 39 ACI GB	390

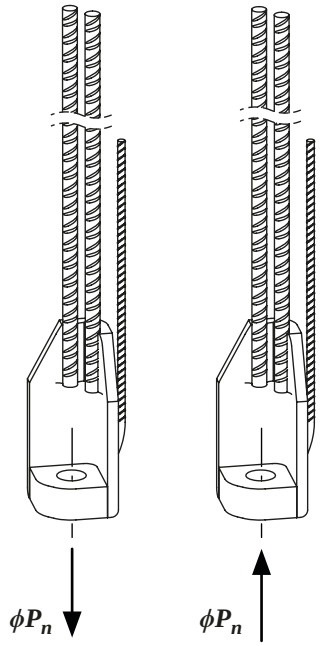

The resistance ϕP_n shown in *Tables* is the resistance of pure steel failure. For concrete failure and further information, please see the technical manual of HPM Rebar Anchor Bolt.