Resistances

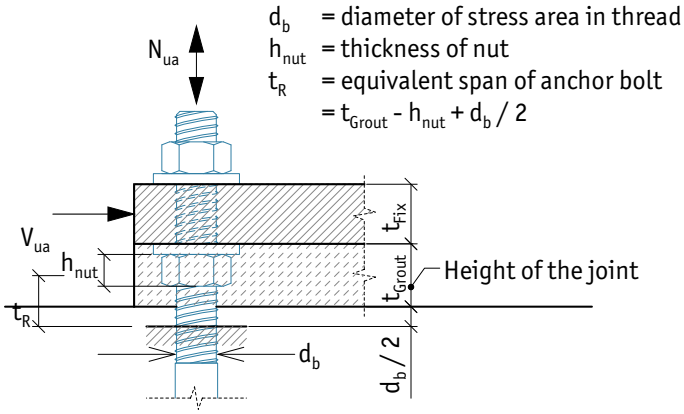

Design values for tensile or compressive resistance of individual HPM Anchor Bolt. (Steel strength).

		HPM 16	HPM 20	HPM 24	HPM 30	HPM 39
N_{Rd} $N_{Rd,0}$	[kN]	62	96	139	220	383

Design values for shear resistance of individual HPM Anchor Bolt. (Steel strength). The resistances are determined in accordance with ETA-13/0603.

Anchor Bolt	V_{Rd} [kN] Final Stage	V_{Rd} [kN] Erection Stage	t_{Grout} [mm]
HPM 16	20	5	50
HPM 20	31	10	50
HPM 24	45	18	50
HPM 30	72	37	50
HPM 39	125	72	60

NOTE 1: Resistances V_{Rd} and $V_{Rd,0}$ are valid for height of joint equal to t_{Grout}.
NOTE 2: Resistances shown in tables are without simultaneous action of axial and shear load. For combined resistance, see HPM Rebar Anchor Bolt Technical Manual section 2.2 – Combined axial and shear load.