Ordering form for PETRA special

If a non standard PETRA is required, please fill a copy of this form and contact Peikko technical support

Basic dimensions

b = _____ mm

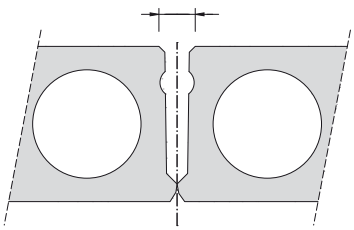

width of opening L = _____ mm

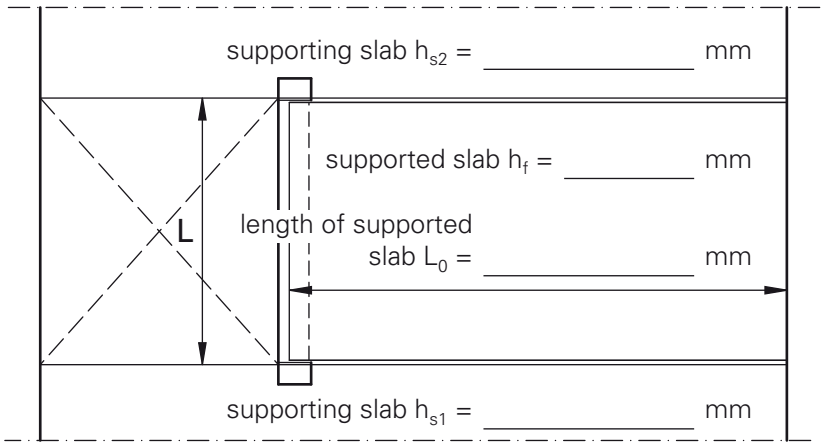

supporting slab h_{s2} = _____ mm

supported slab h_f = _____ mm

length of supported slab L_0 = _____ mm

supporting slab h_{s1} = _____ mm

Load distribution for imposed load

☐ Design model A

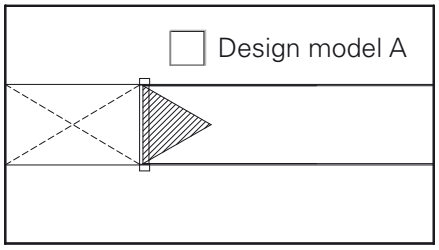

☐ Design model B

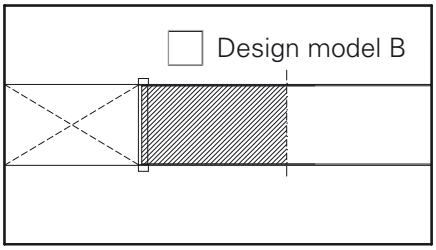

Permanent loads (characteristic value)

weight of hollow-core slab g_{HC} = _____ kN/m²

other permanent loads Δg = _____ kN/m² *(on supported slab)*

Imposed loads (characteristic value)

surface load q_1 = _____ kN/m² *(on supported slab)*

linear load q_2 = _____ kN/m *(on PETRA)*

point load Q_3 = _____ kN *(on PETRA)*

Partial factors

concrete γ_c = _____ *(recommended value = 1,5)*

steel γ_{M0} = _____ *(recommended value = 1,0)*

reinforcement γ_s = _____ *(recommended value = 1,15)*

permanent load γ_G = _____ *(recommended value = 1,35)*

imposed load γ_Q = _____ *(recommended value = 1,5)*

welds γ_{M2} = _____ *(recommended value = 1,25)*

reduction of imposed load during fire $\psi_{1,2}$ = _____ *(0 – 0,8 depending on the type of building)*

Fire reinforcement

☐ Yes (R60) ☐ No

Print Form

Additional L-profiles to the front plate of PETRA

Below you can find example of how to support in-situ slab with L-profiles welded into PETRA. Type of PETRA in this case will be PETRA special. Peikko technical support defines id-number for PETRA special.

In addition designer can define note for PETRA eg. PETRA-101, this note will be printed on the label of PETRA. Characters A-Z, 0-9, + and hypen (-) can be used. Max number of characters is 18.

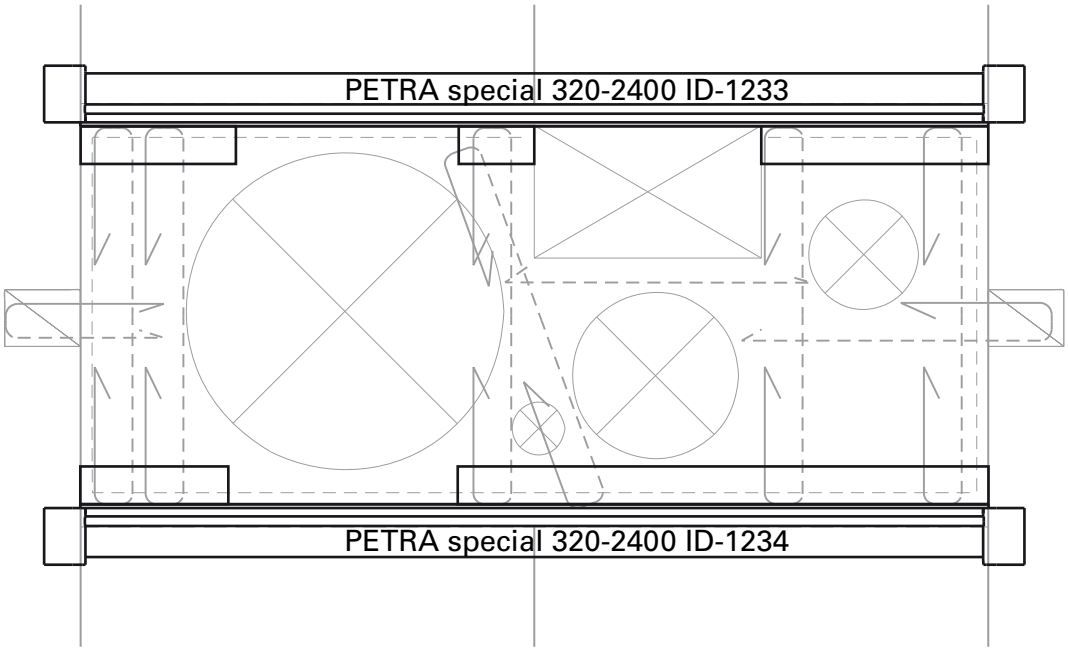

This form can be downloaded from Peikko Group website. Fill in the form and send it to Peikko's technical support with loading information.

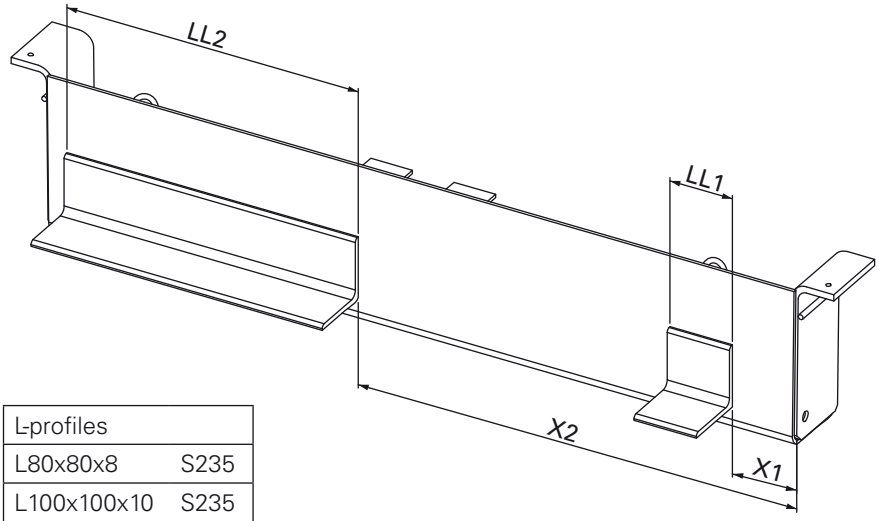

L-profiles	
L80x80x8	S235
L100x100x10	S235
L120x120x12	S235

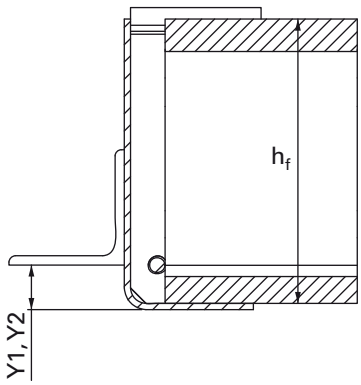

	Type		mm		mm		mm	kN	kN/m
Profile 1	L120x120x12	X1		Y1		LL1			
Profile 2	L120x120x12	X2		Y2		LL2			
Profile 3	L120x120x12	X3		Y3		LL3			
Profile 4	L120x120x12	X4		Y4		LL4			
Profile 5	L120x120x12	X5		Y5		LL5			
Profile 6	L120x120x12	X6		Y6		LL6			